DTC	**B1830/57**	**Short in Driver Side Curtain Shield Squib Circuit**

DTC	**B1831/57**	**Open in Driver Side Curtain Shield Squib Circuit**

DTC	**B1832/57**	**Short to GND in Driver Side Curtain Shield Squib Circuit**

DTC	**B1833/57**	**Short to B+ in Driver Side Curtain Shield Squib Circuit**

DESCRIPTION

The driver side curtain shield squib circuit consists of the center airbag sensor assembly and the curtain shield airbag assembly LH.
The circuit instructs the SRS to deploy when deployment conditions are met.
These DTCs are recorded when a malfunction is detected in the driver side curtain shield squib circuit.

DTC No.	DTC Detection Condition	Trouble Area
B1830/57	• The center airbag sensor assembly receives a line short circuit signal 5 times in the driver side curtain shield squib circuit during primary check. • Driver side curtain shield squib malfunction • Center airbag sensor assembly malfunction	• Floor wire • Curtain shield airbag assembly LH (Driver side curtain shield squib) • Center airbag sensor assembly
B1831/57	• The center airbag sensor assembly receives an open circuit signal in the driver side curtain shield squib circuit for 2 seconds. • Driver side curtain shield squib malfunction • Center airbag sensor assembly malfunction	• Floor wire • Curtain shield airbag assembly LH (Driver side curtain shield squib) • Center airbag sensor assembly
B1832/57	• The center airbag sensor assembly receives a short circuit to ground signal in the driver side curtain shield squib circuit for 0.5 seconds. • Driver side curtain shield squib malfunction • Center airbag sensor assembly malfunction	• Floor wire • Curtain shield airbag assembly LH (Driver side curtain shield squib) • Center airbag sensor assembly
B1833/57	• The center airbag sensor assembly receives a short circuit to B+ signal in the driver side curtain shield squib circuit for 0.5 seconds. • Driver side curtain shield squib malfunction • Center airbag sensor assembly malfunction	• Floor wire • Curtain shield airbag assembly LH (Driver side curtain shield squib) • Center airbag sensor assembly

cardiagn.com

WIRING DIAGRAM

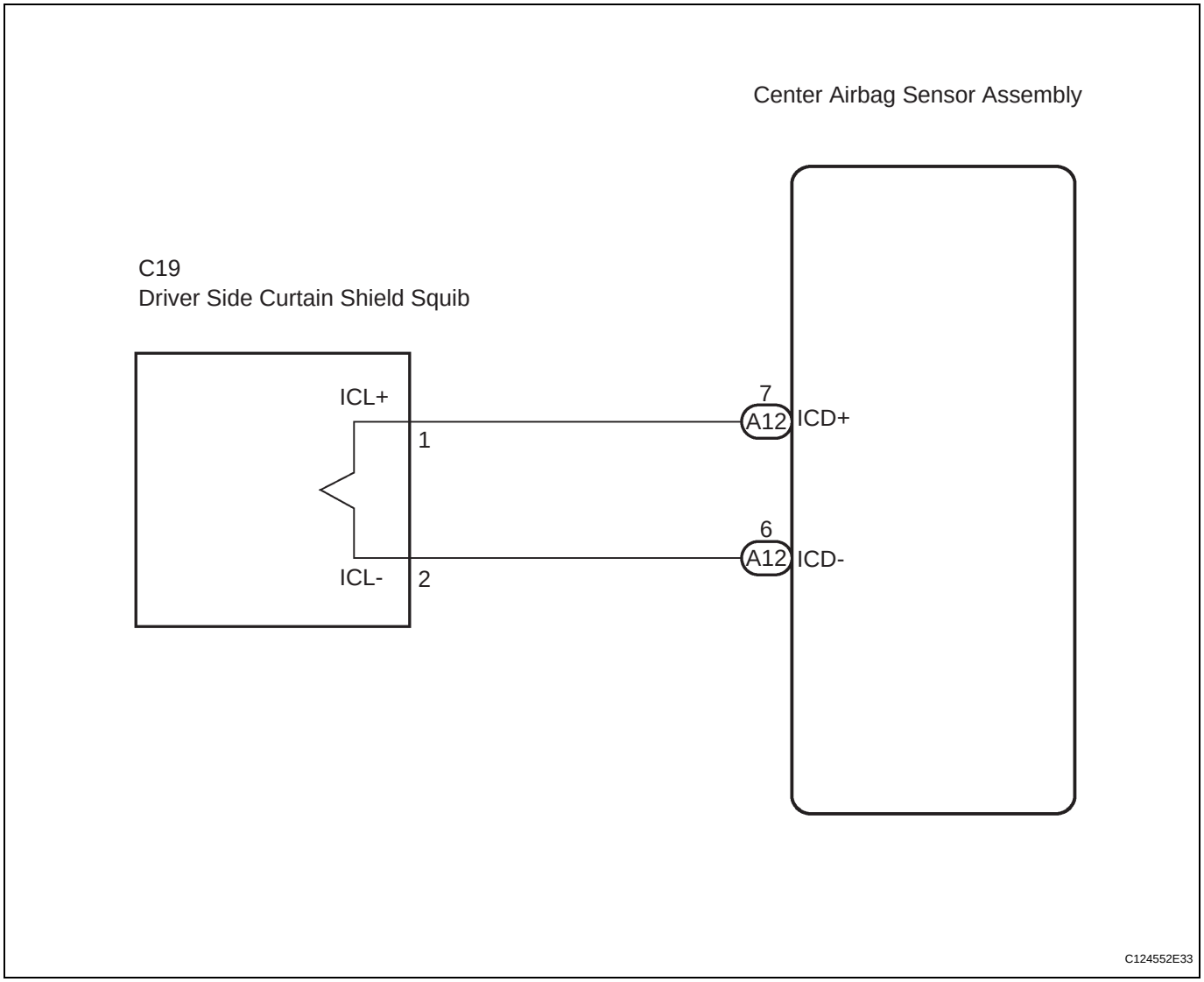

INSPECTION PROCEDURE

HINT:

- Perform the simulation method by selecting the "check mode" (signal check) with the intelligent tester (See page RS-37).
- After selecting the "check mode" (signal check), perform the simulation method by wiggling each connector of the airbag system or driving the vehicle on a city or rough road (See page RS-37).

cardiagn.com

RS

1	CHECK CURTAIN SHIELD AIRBAG ASSEMBLY LH (DRIVER SIDE CURTAIN SHIELD SQUIB)

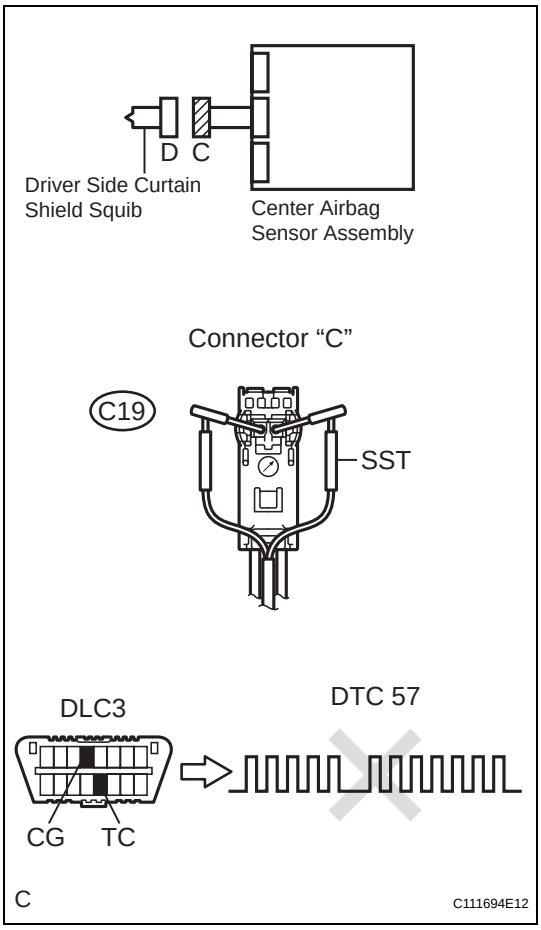

(a) Turn the ignition switch to the LOCK position.
(b) Disconnect the negative (-) terminal cable from the battery, and wait for at least 90 seconds.
(c) Disconnect the connector from the curtain shield airbag assembly LH.
(d) Connect the white wire side of SST (resistance 2.1 Ω) to connector "C".
CAUTION:
Never connect a tester to the curtain shield airbag assembly LH (driver side curtain shield squib) for measurement, as this may lead to a serious injury due to airbag deployment.
NOTICE:
- **Do not forcibly insert the SST into the terminals of the connector when connecting.**
- **Insert straight the SST into the terminals of the connector.**

SST 09843-18060

(e) Connect the negative (-) terminal cable to the battery, and wait for at least 2 seconds.
(f) Turn the ignition switch to the ON position, and wait for at least 60 seconds.
(g) Clear the DTCs stored in the memory (See page RS-34).
(h) Turn the ignition switch to the LOCK position.
(i) Turn the ignition switch to the ON position, and wait for at least 60 seconds.
(j) Check the DTCs (See page RS-34).
OK:
DTC B1830, B1831, B1832, B1833 or 57 is not output.
HINT:
Codes other than DTC B1830, B1831, B1832, B1833 and 57 may be output at this time, but they are not related to this check.

NG	Go to step 2

OK

REPLACE CURTAIN SHIELD AIRBAG ASSEMBLY LH

2	CHECK CONNECTOR

(a) Turn the ignition switch to the LOCK position.
(b) Disconnect the negative (-) terminal cable from the battery, and wait for at least 90 seconds.
(c) Disconnect the SST from connector "C".

cardiagn.com

(d) Check that the floor wire connector (on the curtain shield airbag assembly LH side) is not damaged.
OK:
The lock button is not disengaged, or the claw of the lock is not deformed or damaged.

NG → **REPAIR OR REPLACE FLOOR WIRE**

RS

OK

3 CHECK FLOOR WIRE (DRIVER SIDE CURTAIN SHIELD SQUIB CIRCUIT)

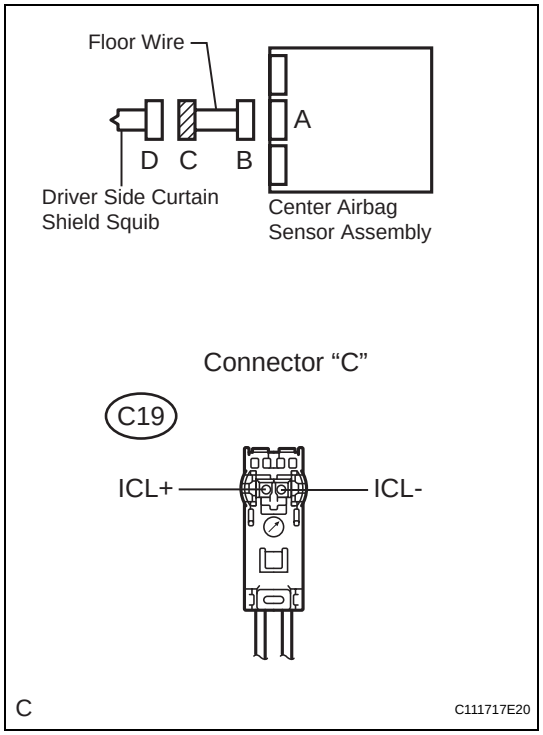

(a) Disconnect the connectors from the center airbag sensor assembly.

(b) Check for a short to B+ in the circuit.
(1) Connect the negative (-) terminal cable to the battery, and wait for at least 2 seconds.
(2) Turn the ignition switch to the ON position.
(3) Measure the voltage according to the value(s) in the table below.
Standard voltage

Tester connection	Condition	Specified condition
C19-1 (ICL+) - Body ground	Ignition switch ON	Below 1 V
C19-2 (ICL-) - Body ground	Ignition switch ON	Below 1 V

(c) Check for an open in the circuit.
(1) Turn the ignition switch to the LOCK position.
(2) Disconnect the negative (-) terminal cable from the battery, and wait for at least 90 seconds.
(3) Measure the resistance according to the value(s) in the table below.
Standard resistance

Tester connection	Condition	Specified condition
C19-1 (ICL+) - C19-2 (ICL-)	Always	Below 1 Ω

(d) Check for a short to ground in the circuit.
(1) Measure the resistance according to the value(s) in the table below.
Standard resistance

Tester connection	Condition	Specified condition
C19-1 (ICL+) - Body ground	Always	1 MΩ or higher
C19-2 (ICL-) - Body ground	Always	1 MΩ or higher

(e) Check for a short in the circuit.
(1) Release the activation prevention mechanism built into connector "B" (See page RS-26).
(2) Measure the resistance according to the value(s) in the table below.
Standard resistance

Tester connection	Condition	Specified condition
C19-1 (ICL+) - C19-2 (ICL-)	Always	1 MΩ or higher

cardiagn.com

NG → **REPAIR OR REPLACE FLOOR WIRE**

OK

RS

4 CHECK CENTER AIRBAG SENSOR ASSEMBLY

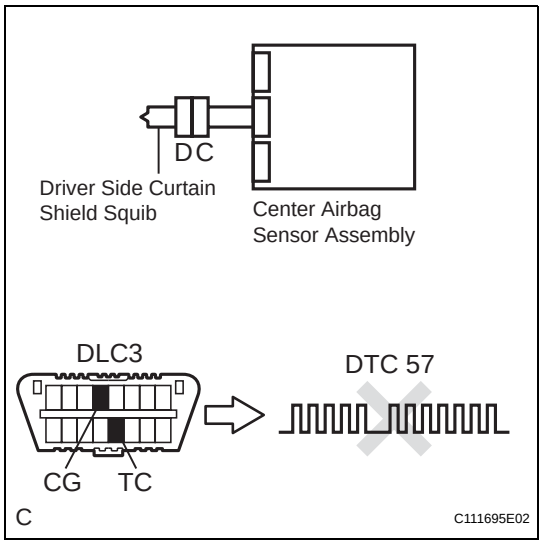

(a) Connect the connectors to the curtain shield airbag assembly LH and the center airbag sensor assembly.
(b) Connect the negative (-) terminal cable to the battery, and wait for at least 2 seconds.
(c) Turn the ignition switch to the ON position, and wait for at least 60 seconds.
(d) Clear the DTCs stored in the memory (See page RS-34).
(e) Turn the ignition switch to the LOCK position.
(f) Turn the ignition switch to the ON position, and wait for at least 60 seconds.
(g) Check the DTCs (See page RS-34).
OK:
DTC B1830, B1831, B1832, B1833 or 57 is not output.
HINT:
Codes other than DTC B1830, B1831, B1832, B1833 and 57 may be output at this time, but they are not related to this check.

NG → **REPLACE CENTER AIRBAG SENSOR ASSEMBLY**

OK

USE SIMULATION METHOD TO CHECK

cardiagn.com